KOFEISHEH

132/33kv SUBSTATION

GENERAL LAYOUT & SECTIONS

REFRENCE DOCUMENT	DOCUMENT NO.	REV.
GENERAL SINGLE LINE DIAGRAM	6154-EL-DIG-0403	

LEGEND :

NOTES :

ELEVATAION :

REV.	DATE	DESCRIPTION	MODIFY	CHECK	APPROVE
04	09/03/2025	ACC TO LET NO.1403/179509/60282	E.BARZEGAR	E.BARZEGAR	M.DANESHPOU
03	02/01/2025	ACC TO LET NO.1403/179509/57039	E.BARZEGAR	E.BARZEGAR	M.DANESHPOU
02	09/09/2024	REVISE.1	E.BARZEGAR	E.BARZEGAR	M.DANESHPOU
01	2024MAY18	ACC TO LET NO.6154-AR-MS-L 1403-22006	E.BARZEGAR	E.BARZEGAR	M.DANESHPOU
00	2024MARCH05	Issued for Approval	E.BARZEGAR	E.BARZEGAR	M.DANESHPOU

CONTRACTOR: MOHAM SHARGH CO.

OWNER: شرکت پالایش نفت آبادان — ABADAN OIL REFINERY COMPANY (AORC)

DWG. NO. : -----

PROJECT: KOFEISHEH 132/33kv SUBSTATION

TITLE: DOCUMENT TITLE — GENERAL LAYOUT & SECTIONS (Cover Sheet)

ISSUE CODE: 6154-EL-DWG-0331

PREPARED: E.BARZEGAR	DATE: 09/03/2025	GHODS NIROO ENGINEERING COMPANY (G.N.E.C)	
CHECKED: E.BARZEGAR	DATE: 09/03/2025		
APPROVED: M.DANESHPOU	DATE: 09/03/2025		
AUTHORIZED:	DATE:		

CONTRACT NO.: 96-73-6154		AORC Doc. No.: -----	SIZE: A3
SCALE: -	DESIGN STAGE: -----	REV: 04	SHEET: 00 of 12

P.O.I.: FA

SHEET	DESCRIPTION	REVISION				
		00	01	02	03	04
00	Cover Sheet	*	*	*	*	*
01	INDEX	*	*	*	*	*
02	SITE PLAN	*	*	*	*	*
03	GENERAL LAYOUT	*	*	*	*	*
04	GROUND FLOOR LAYOUT	*	*	*	*	*
05	SECTION A-A	*	*	*	*	*
06	SECTION B-B	*	*	*	*	*
07	SECTION C-C	*	*	*	*	*
08	SECTION D-D		*	*	*	*
09	SECTION E-E & F-F		*	*	*	*
10	SECTIONS G-G & H-H			*	*	*
11	SECTIONS I-I & J-J			*	*	*
12	SECTION K-K & L-L					*

REFRENCE DOCUMENT	DOCUMENT NO.	REV.
GENERAL SINGLE LINE DIAGRAM	6154-EL-DIG-0403	

LEGEND :

NOTES :

ELEVATAION :

REV.	DATE	DESCRIPTION	MODIFY	CHECK	APPROVE
04	09/03/2025	ACC TO LET NO.1403/179509/60282	E.BARZEGAR	E.BARZEGAR	M.DANESHPOU
03	02/01/2025	ACC TO LET NO.1403/179509/57039	E.BARZEGAR	E.BARZEGAR	M.DANESHPOU
02	09/09/2024	REVISE.1	E.BARZEGAR	E.BARZEGAR	M.DANESHPOU
01	2024MAY18	ACC TO LET NO.6154-AR-MS-L 1403-22006	E.BARZEGAR	E.BARZEGAR	M.DANESHPOU
00	2024MARCH05	Issued for Approval	E.BARZEGAR	E.BARZEGAR	M.DANESHPOU

CONTRACTOR:
MOHAM SHARGH CO.

OWNER:
ABADAN OIL REFINERY COMPANY (AORC)

DWG. NO. : -----

PROJECT:
KOFEISHEH
132/33kv SUBSTATION

TITLE:
DOCUMENT TITLE
GENERAL LAYOUT & SECTIONS
(INDEX)

ISSUE CODE:
6154-EL-DWG-0331

PREPARED:	E.BARZEGAR	DATE:	09/03/2025
CHECKED:	E.BARZEGAR	DATE:	09/03/2025
APPROVED:	M.DANESHPOU	DATE:	09/03/2025
AUTHORIZED:		DATE:	

GHODS NIROO ENGINEERING COMPANY (G.N.E.C)

CONTRACT NO.: 96-73-6154		AORC Doc. No.: -----	SIZE: A3
SCALE: -	DESIGN STAGE: -----	REV: 04	SHEET: 01 of 12

P.O.L.: FA

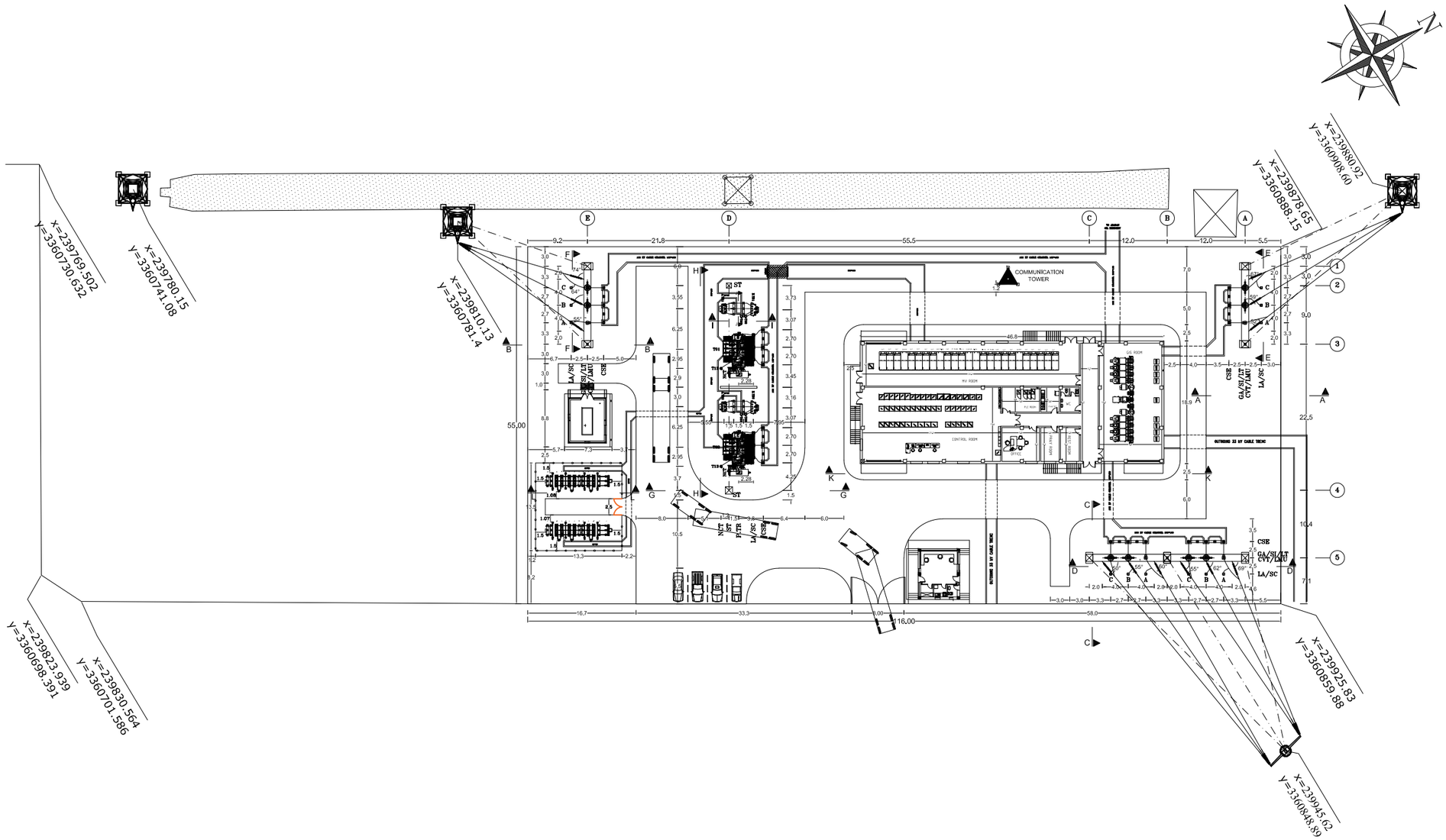

REFRENCE DOCUMENT	DOCUMENT NO.	REV.
GENERAL SINGLE LINE DIAGRAM	6154-EL-DIG-0403	

LEGEND :

ABBREVIATION	DESCRIPTION
LA	LIGHTNING ARRESTER
CVT	CAPACITIVE VOLTAGE TRANSFORMER
SC	SURGE COUNTER
GA	GANTRY
LT	LINE TRAP
LMU	LINE MACHING UNIT
SI	STRING INSULATOR
GIS	GAS INSULATED SWITCHGEAR
P.TR	POWER TRANSFORMER
AUX.TR	AUXILLIARY TRANSFORMER
E.TR	EARTHING TRANSFORMER
NCT	NEUTRAL CURRENT TRANSFORMER
PI	POST INSULATOR
ST	STATIC TOWER
COF	CUTOUT FUSE
CSE	CABLE SEALING END

	CLEARANCES (m)	132KV	33KV
1	Minimum height of the base of all post type or bushing insulators from ground	2.50	2.50
2	Minimum clearances between live parts and ground potential	1.51	0.4
3	Minimum clearances between energized portions of different phases (rigid parts)	1.58	0.5
4	Minimum height of energized parts above ground	3.76	3.1
5	Distance between phases of main suspension	3.0	1.5
6	Minimum vertical clearanes of overhead lines above roadway	9.0	7.0
7	Minimum shield wire clearanes over bus conductors	3.0	3.0

NOTES :

POWER TRANSFORMER	AUX.TR
132/34 KV	33/0.4 KV
50 MVA	250KVA
YNd1	Dyn11
	E.TR
	33 KV
	875 A
	ZNO

ELEVATAION :

REV.	DATE	DESCRIPTION	MODIFY	CHECK	APPROVE
04	09/03/2025	ACC TO LET NO.1403/179509/60282	E.BARZEGAR	E.BARZEGAR	M.DANESHPOU
03	02/01/2025	ACC TO LET NO.1403/179509/57039	E.BARZEGAR	E.BARZEGAR	M.DANESHPOU
02	09/09/2024	REVISE.1	E.BARZEGAR	E.BARZEGAR	M.DANESHPOU
01	2024MAY18	ACC TO LET NO.6154-AR-MS-L 1403-22006	E.BARZEGAR	E.BARZEGAR	M.DANESHPOU
00	2024MARCH05	Issued for Approval	E.BARZEGAR	E.BARZEGAR	M.DANESHPOU

CONTRACTOR: MOHAM SHARGH CO.

OWNER: شرکت پالایش نفت آبادان — ABADAN OIL REFINERY COMPANY (AORC)

DWG. NO. : -----

PROJECT:

KOFEISHEH 132/33kv SUBSTATION

TITLE:

DOCUMENT TITLE

GENERAL LAYOUT & SECTIONS

(SITE PLAN)

ISSUE CODE: 6154-EL-DWG-0331

PREPARED:	E.BARZEGAR	DATE:	09/03/2025
CHECKED:	E.BARZEGAR	DATE:	09/03/2025
APPROVED:	M.DANESHPOU	DATE:	09/03/2025
AUTHORIZED:		DATE:	

GHODS NIROO ENGINEERING COMPANY (G.N.E.C)

CONTRACT NO.: 96-73-6154		AORC Doc. No.: -----	SIZE: A3
SCALE: 1/700	DESIGN STAGE: -----	REV: 04	SHEET: 02 of 12

P.O.: 8A

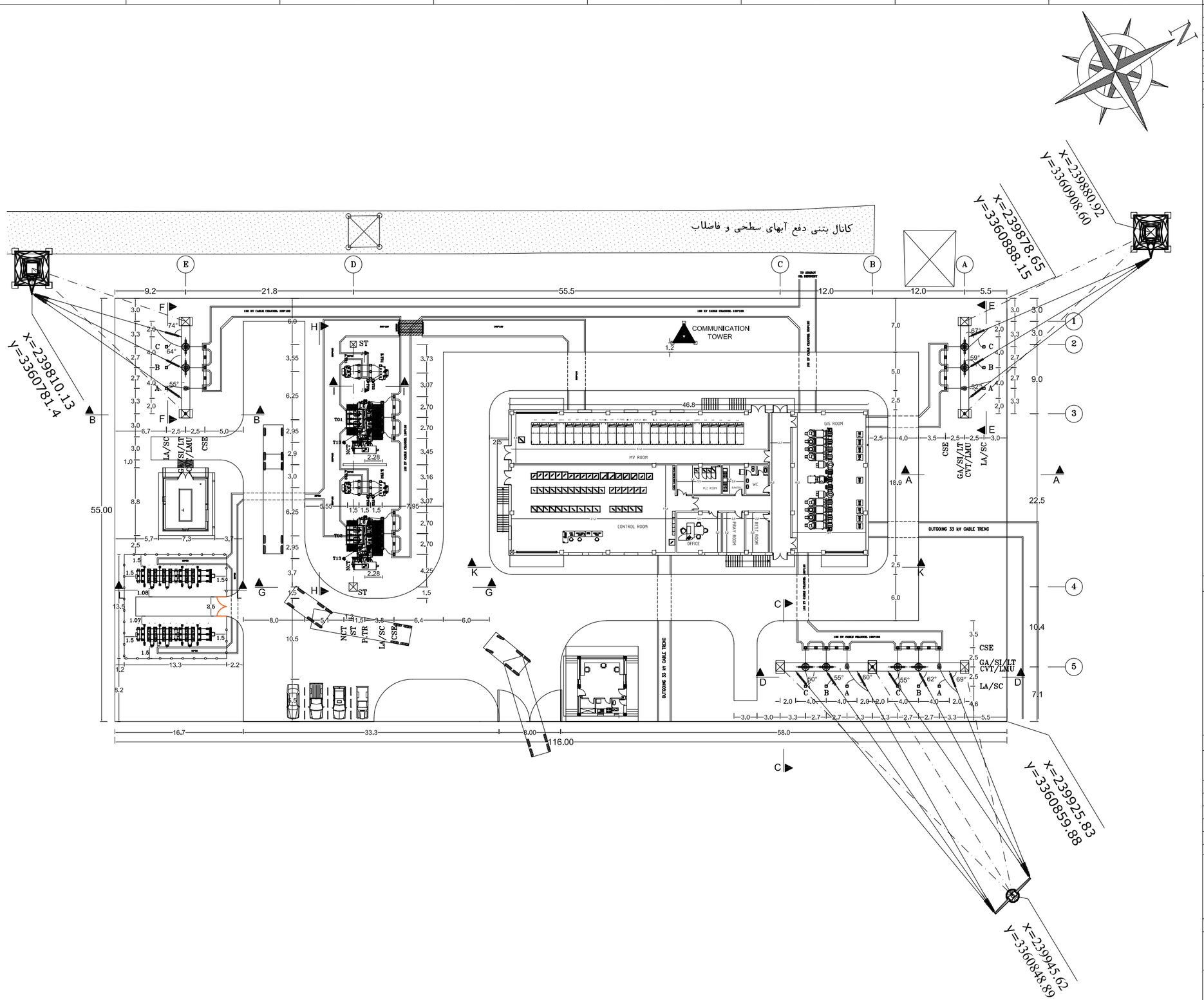

REFRENCE DOCUMENT	DOCUMENT NO.	REV.
GENERAL SINGLE LINE DIAGRAM	6154-EL-DIG-0403	

LEGEND :

ABBREVIATION	DESCRIPTION
LA	LIGHTNING ARRESTER
CVT	CAPACITIVE VOLTAGE TRANSFORMER
SC	SURGE COUNTER
GA	GANTRY
LT	LINE TRAP
LMU	LINE MACHING UNIT
SI	STRING INSULATOR
GIS	GAS INSULATED SWITCHGEAR
P.TR	POWER TRANSFORMER
AUX.TR	AUXILLIARY TRANSFORMER
E.TR	EARTHING TRANSFORMER
NCT	NEUTRAL CURRENT TRANSFORMER
PI	POST INSULATOR
ST	STATIC TOWER
COF	CUTOUT FUSE
CSE	CABLE SEALING END

	CLEARANCES (m)	132KV	33KV
1	Minimum height of the base of all post type or bushing insulators from ground	2.50	2.50
2	Minimum clearances between live parts and ground potential	1.51	0.4
3	Minimum clearances between energized portions of different phases (rigid parts)	1.58	0.5
4	Minimum height of energized parts above ground	3.76	3.1
5	Distance between phases of main suspension	3.0	1.5
6	Minimum vertical clearanes of overhead lines above roadway	9.0	7.0
7	Minimum shield wire clearanes over bus conductors	3.0	3.0

NOTES :

POWER TRANSFORMER	AUX.TR
132/34 KV	33/0.4 KV
50 MVA	250KVA
YNd1	Dyn11
	E.TR
	33 KV
	875 A
	ZNO

ELEVATAION :

REV.	DATE	DESCRIPTION	MODIFY	CHECK	APPROVE
04	09/03/2025	ACC TO LET NO.1403/179509/60282	E.BARZEGAR	E.BARZEGAR	M.DANESHPOU
03	02/01/2025	ACC TO LET NO.1403/179509/57039	E.BARZEGAR	E.BARZEGAR	M.DANESHPOU
02	09/09/2024	REVISE.1	E.BARZEGAR	E.BARZEGAR	M.DANESHPOU
01	2024MAY18	ACC TO LET NO.6154-AR-MS-L 1403-22006	E.BARZEGAR	E.BARZEGAR	M.DANESHPOU
00	2024MARCH05	Issued for Approval	E.BARZEGAR	E.BARZEGAR	M.DANESHPOU

CONTRACTOR: MOHAM SHARGH CO.

OWNER: شرکت پالایش نفت آبادان — ABADAN OIL REFINERY COMPANY (AORC)

DWG. NO. : -----

PROJECT:

KOFEISHEH
132/33kv SUBSTATION

TITLE:

DOCUMENT TITLE

GENERAL LAYOUT & SECTIONS

(GENERAL LAYOUT)

ISSUE CODE: 6154-EL-DWG-0331

PREPARED:	E.BARZEGAR	DATE:	09/03/2025
CHECKED:	E.BARZEGAR	DATE:	09/03/2025
APPROVED:	M.DANESHPOU	DATE:	09/03/2025
AUTHORIZED:		DATE:	

GHODS NIROO ENGINEERING COMPANY (G.N.E.C)

CONTRACT NO.: 96-73-6154		AORC Doc. No.: -----	SIZE: A3
SCALE: 1/500	DESIGN STAGE: -----	REV: 04	SHEET: 03 of 12

P.O.I.: IFA

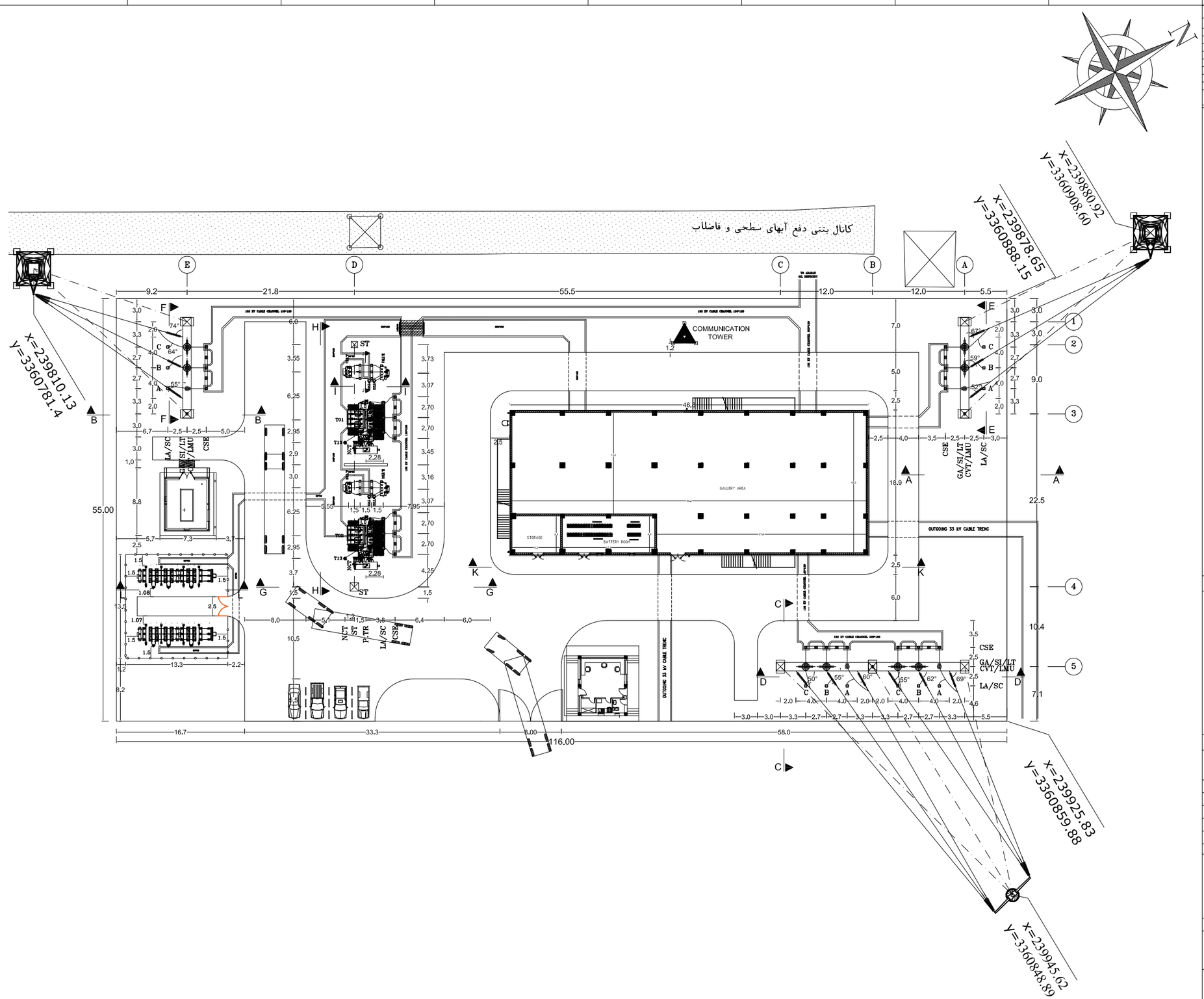

REFRENCE DOCUMENT	DOCUMENT NO.	REV.
GENERAL SINGLE LINE DIAGRAM	6154-EL-DIG-0403	

LEGEND :

ABBREVIATION	DESCRIPTION
LA	LIGHTNING ARRESTER
CVT	CAPACITIVE VOLTAGE TRANSFORMER
SC	SURGE COUNTER
GA	GANTRY
LT	LINE TRAP
LMU	LINE MACHING UNIT
SI	STRING INSULATOR
GIS	GAS INSULATED SWITCHGEAR
P.TR	POWER TRANSFORMER
AUX.TR	AUXILLIARY TRANSFORMER
E.TR	EARTHING TRANSFORMER
NCT	NEUTRAL CURRENT TRANSFORMER
PI	POST INSULATOR
ST	STATIC TOWER
COF	CUTOUT FUSE
CSE	CABLE SEALING END

	CLEARANCES (m)	132KV	33KV
1	Minimum height of the base of all post type or bushing insulators from ground	2.50	2.50
2	Minimum clearances between live parts and ground potential	1.51	0.4
3	Minimum clearances between energized portions of different phases (rigid parts)	1.58	0.5
4	Minimum height of energized parts above ground	3.76	3.1
5	Distance between phases of main suspension	3.0	1.5
6	Minimum vertical clearanes of overhead lines above roadway	9.0	7.0
7	Minimum shield wire clearanes over bus conductors	3.0	3.0

NOTES :

POWER TRANSFORMER	AUX.TR
132/34 KV	33/0.4 KV
50 MVA	250KVA
YNd1	Dyn11
	E.TR
	33 KV
	875 A
	ZNO

ELEVATAION :

REV.	DATE	DESCRIPTION	MODIFY	CHECK	APPROVE
04	09/03/2025	ACC TO LET NO.1403/179509/60282	E.BARZEGAR	E.BARZEGAR	M.DANESHPOU
03	02/01/2025	ACC TO LET NO.1403/179509/57039	E.BARZEGAR	E.BARZEGAR	M.DANESHPOU
02	09/09/2024	REVISE.1	E.BARZEGAR	E.BARZEGAR	M.DANESHPOU
01	2024MAY18	ACC TO LET NO.6154-AR-MS-L 1403-22006	E.BARZEGAR	E.BARZEGAR	M.DANESHPOU
00	2024MARCH05	Issued for Approval	E.BARZEGAR	E.BARZEGAR	M.DANESHPOU

CONTRACTOR: MOHAM SHARGH CO.

OWNER: شرکت پالایش نفت آبادان — ABADAN OIL REFINERY COMPANY (AORC)

DWG. NO. : -----

PROJECT:

KOFEISHEH 132/33kv SUBSTATION

TITLE: DOCUMENT TITLE

GENERAL LAYOUT & SECTIONS (GROUND FLOOR LAYOUT)

ISSUE CODE: 6154-EL-DWG-0331

PREPARED:	E.BARZEGAR	DATE:	09/03/2025
CHECKED:	E.BARZEGAR	DATE:	09/03/2025
APPROVED:	M.DANESHPOU	DATE:	09/03/2025
AUTHORIZED:		DATE:	

GHODS NIROO ENGINEERING COMPANY (G.N.E.C)

CONTRACT NO.: 96-73-6154		AORC Doc. No.: -----	SIZE: A3
SCALE: 1/500	DESIGN STAGE: -----	REV: 04	SHEET: 04 of 12

P.O.I.:IFA

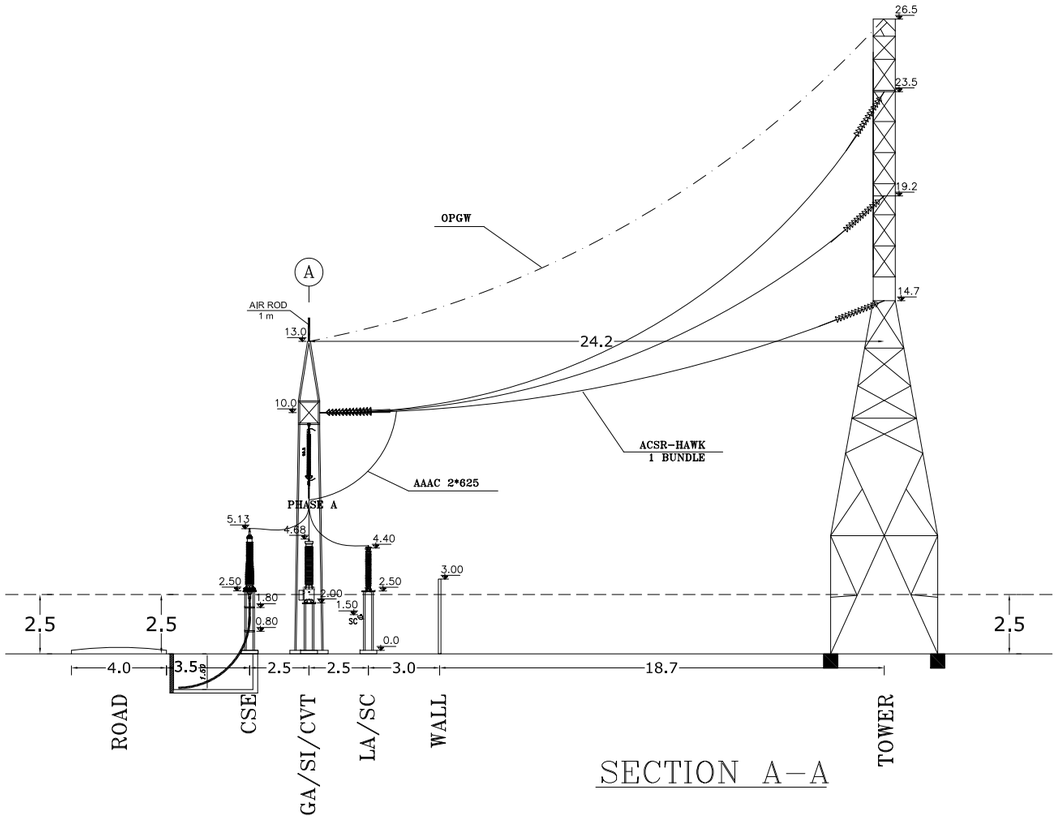

SECTION A-A

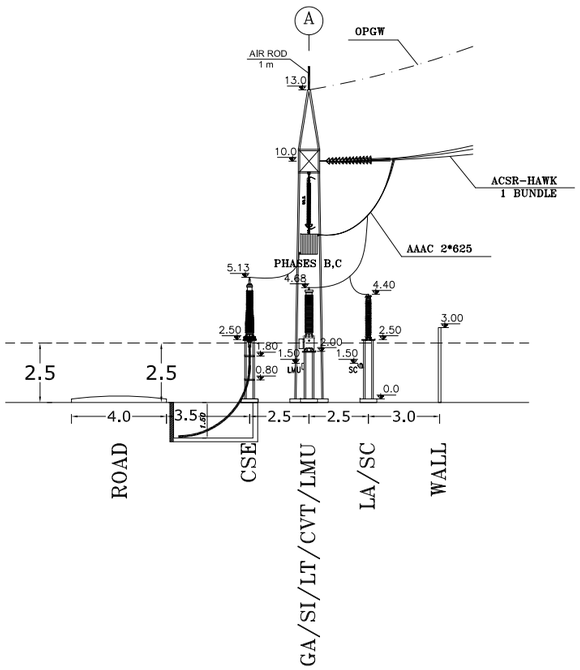

REFRENCE DOCUMENT	DOCUMENT NO.	REV.
GENERAL SINGLE LINE DIAGRAM	6154-EL-DIG-0403	

LEGEND :

NOTES :

132KV CABLE: N2XSK2YRY – 1×630/215 mm^2 –76/132(145) kV
Overall diameter: 102.2mm
Minimum Bending Radius=15D: 1.55m

33KV CABLE: XLPE – 1×300/35 mm^2–18/30 (36) kV
Overall diameter: 58.5mm
Minimum Bending Radius=15D: 0.88m

ELEVATAION :

REV.	DATE	DESCRIPTION	MODIFY	CHECK	APPROVE
04	09/03/2025	ACC TO LET NO.1403/179509/60282	E.BARZEGAR	E.BARZEGAR	M.DANESHPOU
03	02/01/2025	ACC TO LET NO.1403/179509/57039	E.BARZEGAR	E.BARZEGAR	M.DANESHPOU
02	09/09/2024	REVISE.1	E.BARZEGAR	E.BARZEGAR	M.DANESHPOU
01	2024MAY18	ACC TO LET NO.6154-AR-MS-L 1403-22006	E.BARZEGAR	E.BARZEGAR	M.DANESHPOU
00	2024MARCH05	Issued for Approval	E.BARZEGAR	E.BARZEGAR	M.DANESHPOU

CONTRACTOR: MOHAM SHARGH CO.

OWNER: ABADAN OIL REFINERY COMPANY (AORC)

DWG. NO. : -----

PROJECT:

KOFEISHEH
132/33kv SUBSTATION

TITLE: DOCUMENT TITLE

GENERAL LAYOUT & SECTIONS
(SECTION A-A)

ISSUE CODE: 6154-EL-DWG-0331

PREPARED: E.BARZEGAR	DATE: 09/03/2025	GHODS NIROO ENGINEERING COMPANY (G.N.E.C)	
CHECKED: E.BARZEGAR	DATE: 09/03/2025		
APPROVED: M.DANESHPOU	DATE: 09/03/2025		
AUTHORIZED:	DATE:		

CONTRACT NO.: 96-73-6154 | AORC Doc. No.: ----- | SIZE: A3

SCALE: 1/250 | DESIGN STAGE: ----- | REV: 04 | SHEET: 05 of 12

P.O.I.: IFA

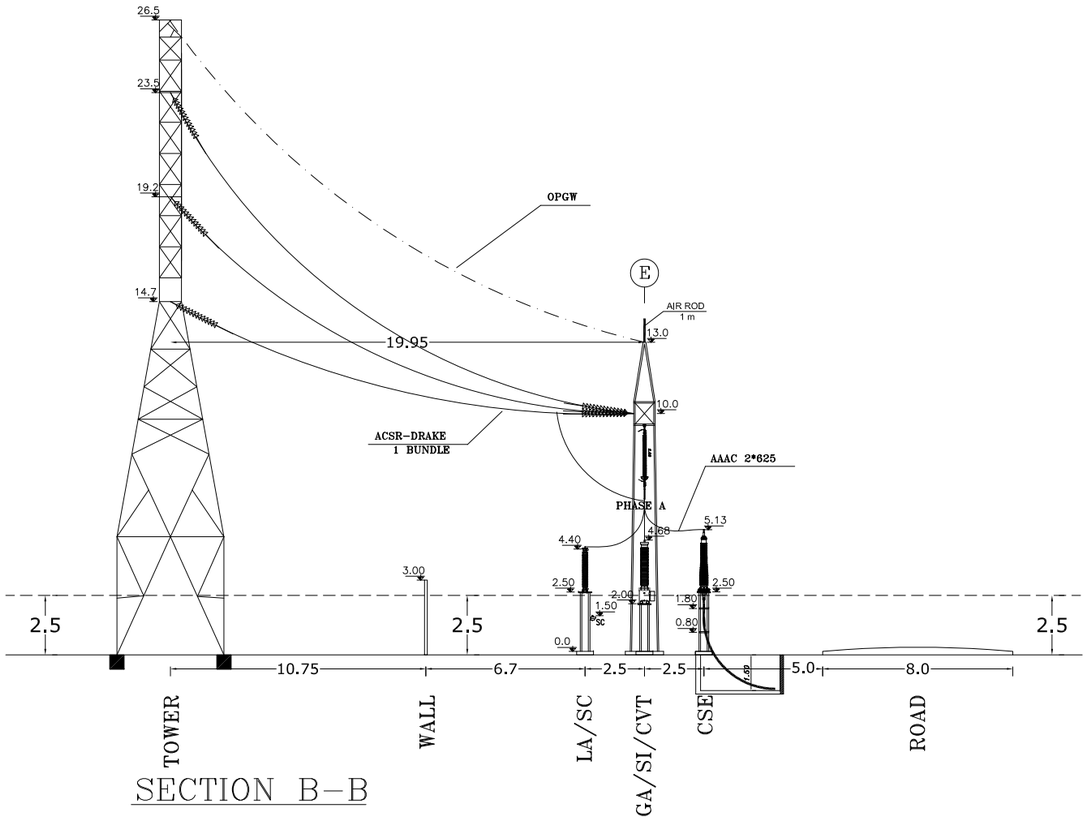

SECTION B–B

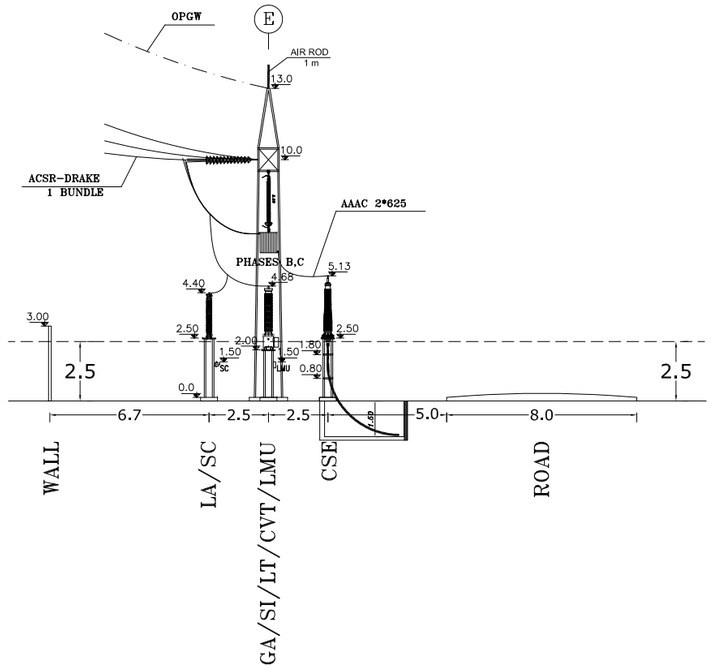

REFRENCE DOCUMENT	DOCUMENT NO.	REV.
GENERAL SINGLE LINE DIAGRAM	6154-EL-DIG-0403	

LEGEND :

NOTES :

132KV CABLE: N2XSK2YRY – 1×630/215 mm^2 –76/132(145) kV
Overall diameter: 102.2mm
Minimum Bending Radius=15D: 1.55m

33KV CABLE: XLPE – 1×300/35 mm^2 –18/30 (36) kV
Overall diameter: 56.5mm
Minimum Bending Radius=15D: 0.88m

ELEVATAION :

REV.	DATE	DESCRIPTION	MODIFY	CHECK	APPROVE
04	09/03/2025	ACC TO LET NO.1403/179509/60282	E.BARZEGAR	E.BARZEGAR	M.DANESHPOU
03	02/01/2025	ACC TO LET NO.1403/179509/57039	E.BARZEGAR	E.BARZEGAR	M.DANESHPOU
02	09/09/2024	REVISE.1	E.BARZEGAR	E.BARZEGAR	M.DANESHPOU
01	2024MAY18	ACC TO LET NO.6154-AR-MS-L 1403-22006	E.BARZEGAR	E.BARZEGAR	M.DANESHPOU
00	2024MARCH05	Issued for Approval	E.BARZEGAR	E.BARZEGAR	M.DANESHPOU

CONTRACTOR: MOHAM SHARGH CO.

OWNER: ABADAN OIL REFINERY COMPANY (AORC)

DWG. NO. : -----

PROJECT:

KOFEISHEH
132/33kv SUBSTATION

TITLE: DOCUMENT TITLE

GENERAL LAYOUT & SECTIONS
(SECTION B–B)

ISSUE CODE: 6154-EL-DWG-0331

PREPARED: E.BARZEGAR	DATE: 09/03/2025	GHODS NIROO ENGINEERING COMPANY (G.N.E.C)	
CHECKED: E.BARZEGAR	DATE: 09/03/2025		
APPROVED: M.DANESHPOU	DATE: 09/03/2025		
AUTHORIZED:	DATE:		

CONTRACT NO.: 96-73-6154		AORC Doc. No.: -----	SIZE: A3
SCALE: 1/250	DESIGN STAGE: -----	REV: 04	SHEET: 06 of 12

P.O.I.: IFA

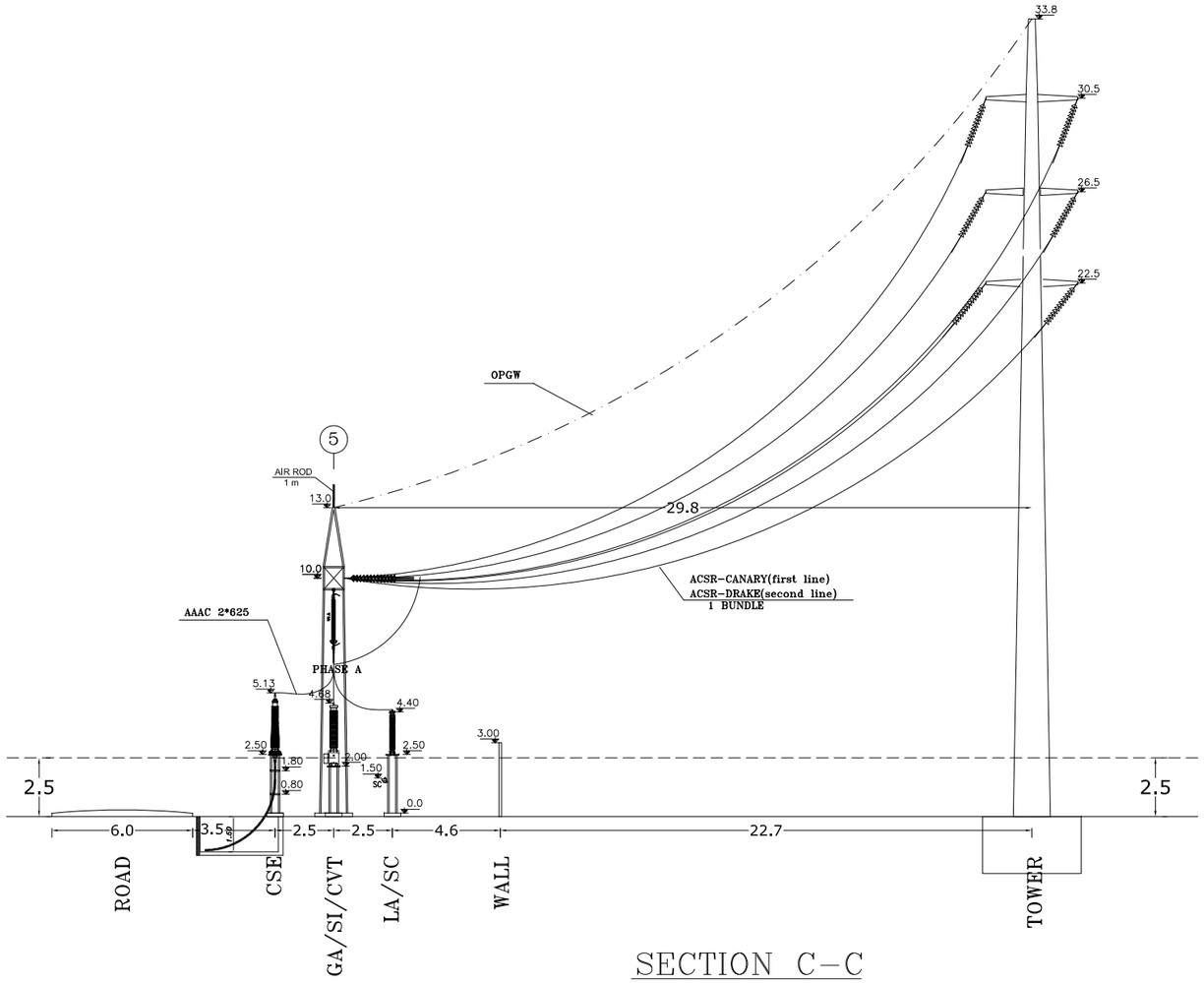

SECTION C-C

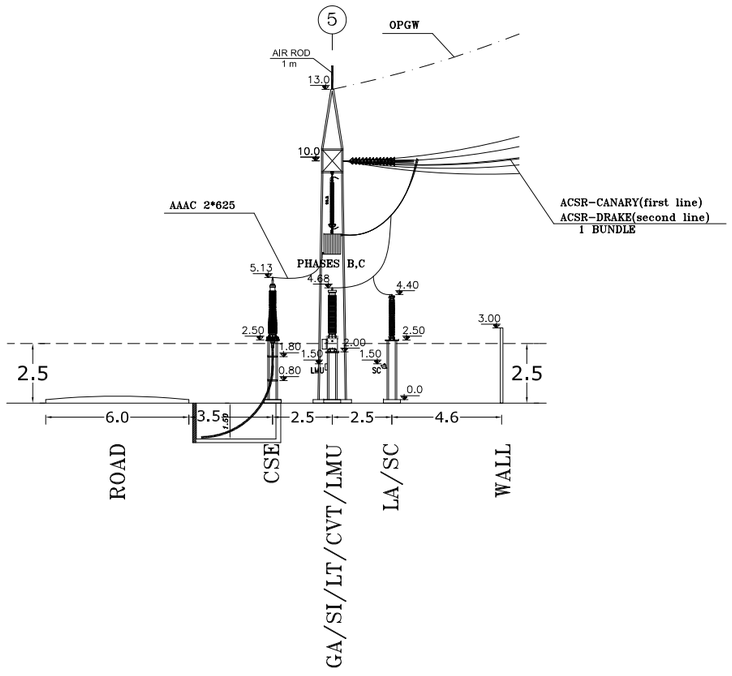

REFRENCE DOCUMENT	DOCUMENT NO.	REV.
GENERAL SINGLE LINE DIAGRAM	6154-EL-DIG-0403	

LEGEND :

NOTES :

132KV CABLE: N2XSK2YRY – 1×630/215 mm^2 -76/132(145) kV
Overall diameter: 102.2mm
Minimum Bending Radius=15D: 1.55m

33KV CABLE: XLPE – 1×300/35 mm^2 -18/30 (36) kV
Overall diameter: 58.5mm
Minimum Bending Radius=15D: 0.88m

ELEVATAION :

REV.	DATE	DESCRIPTION	MODIFY	CHECK	APPROVE
04	09/03/2025	ACC TO LET NO.1403/179509/60282	E.BARZEGAR	E.BARZEGAR	M.DANESHPOU
03	02/01/2025	ACC TO LET NO.1403/179509/57039	E.BARZEGAR	E.BARZEGAR	M.DANESHPOU
02	09/09/2024	REVISE.1	E.BARZEGAR	E.BARZEGAR	M.DANESHPOU
01	2024MAY18	ACC TO LET NO.6154-AR-MS-L 1403-22006	E.BARZEGAR	E.BARZEGAR	M.DANESHPOU
00	2024MARCH05	Issued for Approval	E.BARZEGAR	E.BARZEGAR	M.DANESHPOU

CONTRACTOR: MOHAM SHARGH CO.

OWNER: شرکت پالایش نفت آبادان
ABADAN OIL REFINERY COMPANY (AORC)

DWG. NO. : -----

PROJECT:

KOFEISHEH
132/33kv SUBSTATION

TITLE:

DOCUMENT TITLE

GENERAL LAYOUT & SECTIONS
(SECTION C-C)

ISSUE CODE: 6154-EL-DWG-0331

PREPARED: E.BARZEGAR	DATE: 09/03/2025	GHODS NIROO ENGINEERING COMPANY (G.N.E.C)
CHECKED: E.BARZEGAR	DATE: 09/03/2025	
APPROVED: M.DANESHPOU	DATE: 09/03/2025	
AUTHORIZED:	DATE:	

CONTRACT NO.: 96-73-6154 | AORC Doc. No.: ----- | SIZE: A3

SCALE: 1/250 | DESIGN STAGE: ----- | REV: 04 | SHEET: 07 of 12

P.O.: FA

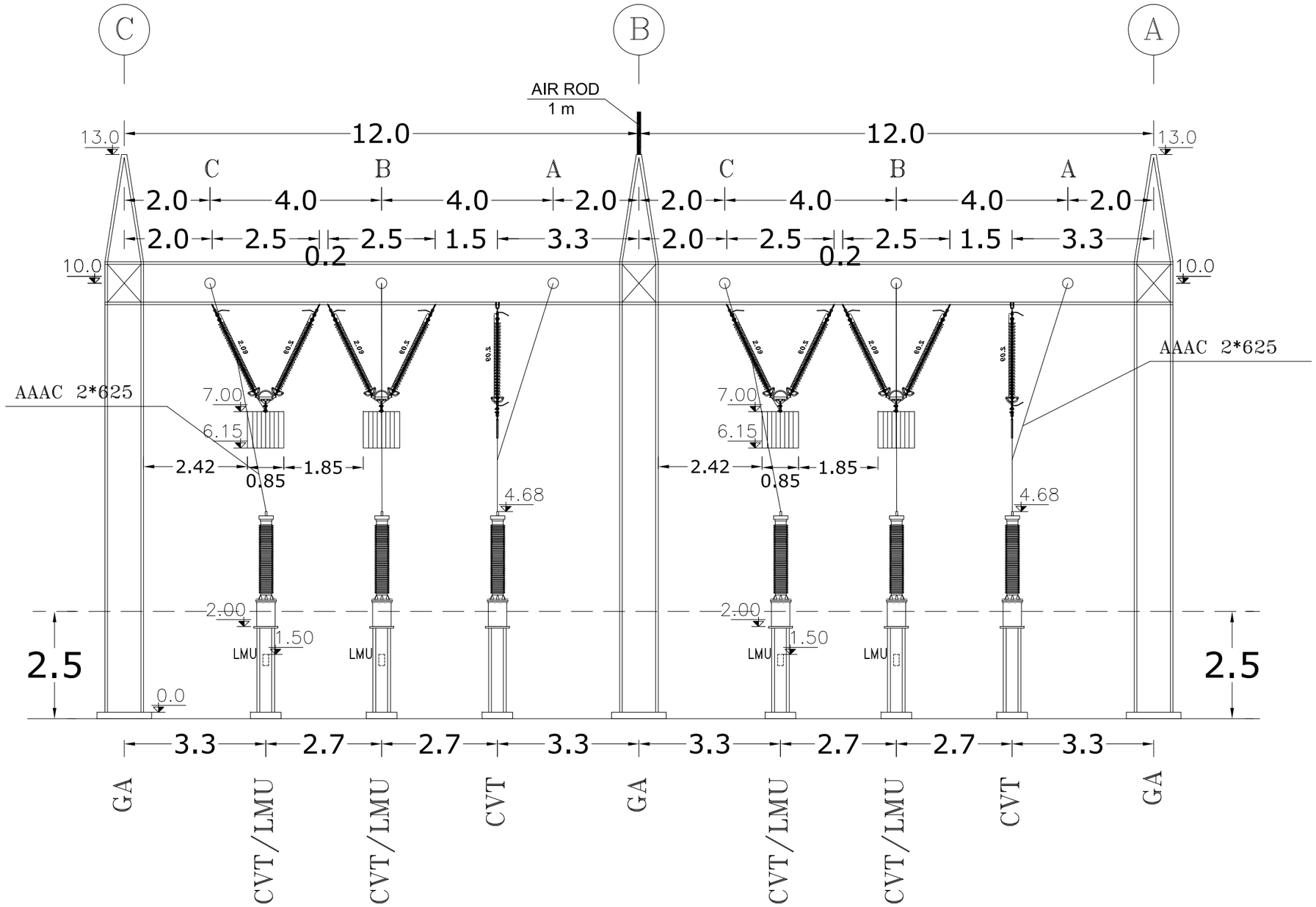

SECTION D-D

REFRENCE DOCUMENT	DOCUMENT NO.	REV.
GENERAL SINGLE LINE DIAGRAM	6154-EL-DIG-0403	

LEGEND :

NOTES :

ELEVATAION :

REV.	DATE	DESCRIPTION	MODIFY	CHECK	APPROVE
04	09/03/2025	ACC TO LET NO.1403/179509/60282	E.BARZEGAR	E.BARZEGAR	M.DANESHPOU
03	02/01/2025	ACC TO LET NO.1403/179509/57039	E.BARZEGAR	E.BARZEGAR	M.DANESHPOU
02	09/09/2024	REVISE.1	E.BARZEGAR	E.BARZEGAR	M.DANESHPOU
01	2024MAY18	ACC TO LET NO.6154--AR-MS-L 1403-22006	E.BARZEGAR	E.BARZEGAR	M.DANESHPOU
00	2024MARCH05	Issued for Approval	E.BARZEGAR	E.BARZEGAR	M.DANESHPOU

CONTRACTOR: MOHAM SHARGH CO.

OWNER: شرکت پالایش نفت آبادان — ABADAN OIL REFINERY COMPANY (AORC)

DWG. NO. : -----

PROJECT: KOFEISHEH 132/33kv SUBSTATION

TITLE: DOCUMENT TITLE — GENERAL LAYOUT & SECTIONS (SECTION D-D)

ISSUE CODE: 6154-EL-DWG-0331

PREPARED:	E.BARZEGAR	DATE:	09/03/2025
CHECKED:	E.BARZEGAR	DATE:	09/03/2025
APPROVED:	M.DANESHPOU	DATE:	09/03/2025
AUTHORIZED:		DATE:	

GHODS NIROO ENGINEERING COMPANY (G.N.E.C)

CONTRACT NO.: 96-73-6154		AORC Doc. No.: -----	SIZE: A3
SCALE: 1/100	DESIGN STAGE: -----	REV: 04	SHEET: 08 of 12

P.O.I.: IFA

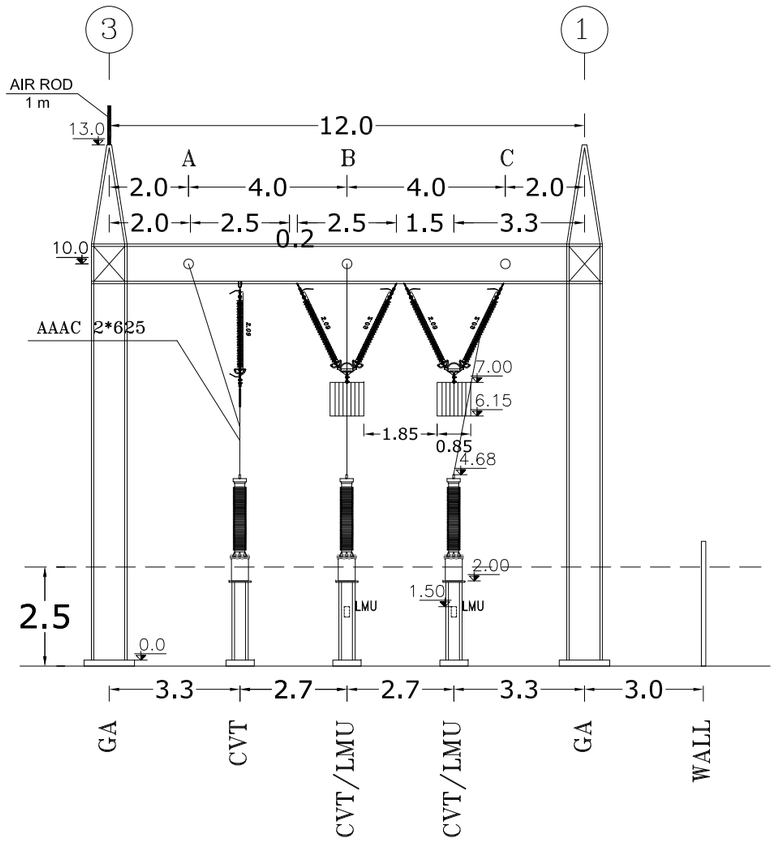

SECTION E-E

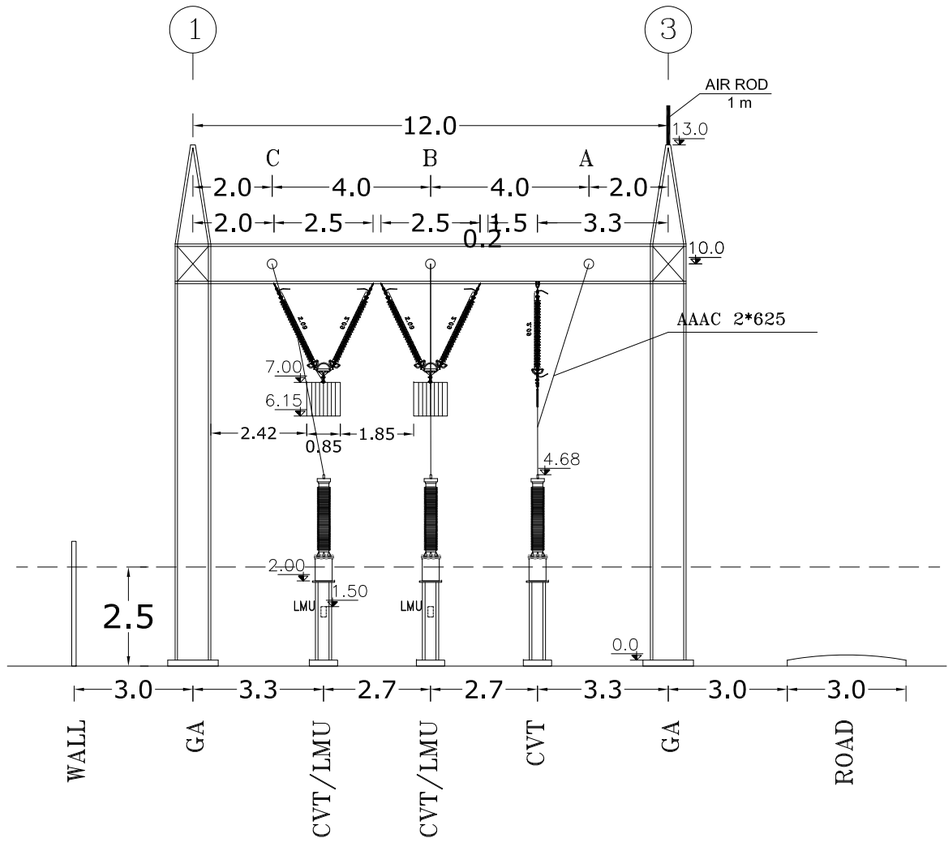

SECTION F-F

REFRENCE DOCUMENT	DOCUMENT NO.	REV.
GENERAL SINGLE LINE DIAGRAM	6154-EL-DIG-0403	

LEGEND :

NOTES :

ELEVATAION :

REV.	DATE	DESCRIPTION	MODIFY	CHECK	APPROVE
04	09/03/2025	ACC TO LET NO.1403/179509/60282	E.BARZEGAR	E.BARZEGAR	M.DANESHPOU
03	02/01/2025	ACC TO LET NO.1403/179509/57039	E.BARZEGAR	E.BARZEGAR	M.DANESHPOU
02	09/09/2024	REVISE.1	E.BARZEGAR	E.BARZEGAR	M.DANESHPOU
01	2024MAY18	ACC TO LET NO.6154-AR-MS-L 1403-22006	E.BARZEGAR	E.BARZEGAR	M.DANESHPOU
00	2024MARCH05	Issued for Approval	E.BARZEGAR	E.BARZEGAR	M.DANESHPOU

CONTRACTOR:
MOHAM SHARGH CO.

OWNER:
شرکت پالایش نفت آبادان
ABADAN OIL REFINERY COMPANY (AORC)

DWG. NO. : -----

PROJECT:
KOFEISHEH
132/33kv SUBSTATION

TITLE:
DOCUMENT TITLE
GENERAL LAYOUT & SECTIONS
(SECTION E-E & F-F)

ISSUE CODE: 6154-EL-DWG-0331

PREPARED: E.BARZEGAR	DATE: 09/03/2025	GHODS NIROO ENGINEERING COMPANY (G.N.E.C)	
CHECKED: E.BARZEGAR	DATE: 09/03/2025		
APPROVED: M.DANESHPOU	DATE: 09/03/2025		
AUTHORIZED:	DATE:		

CONTRACT NO.: 96-73-6154		AORC Doc. No.: -----	SIZE: A3
SCALE: 1/150	DESIGN STAGE: -----	REV: 04	SHEET: 09 of 12

P.O.: FA

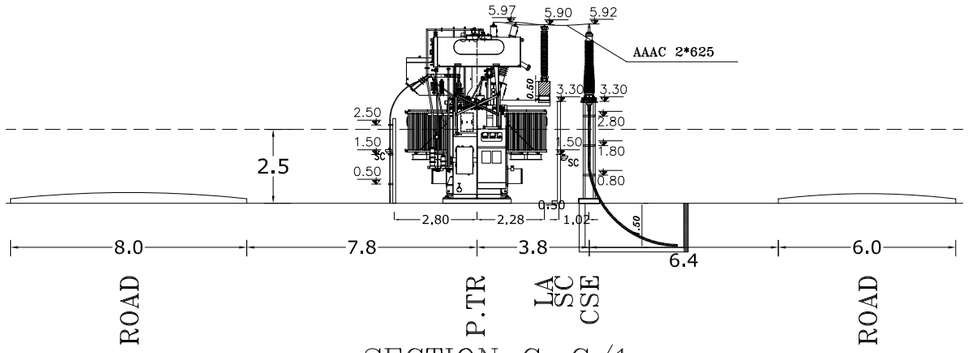

SECTION G–G/1

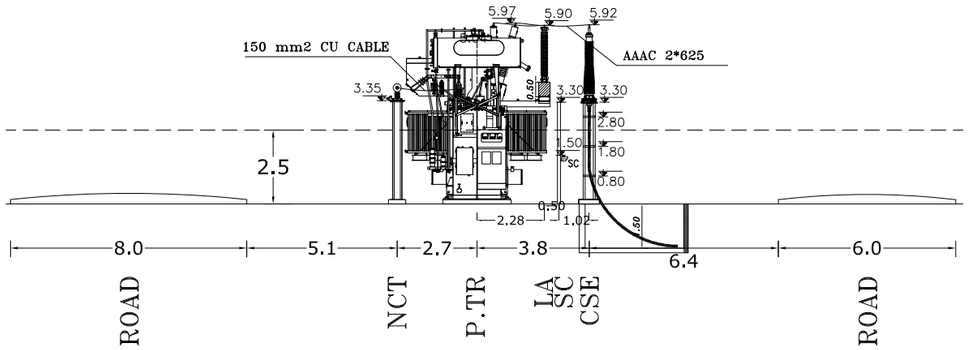

SECTION G–G/2

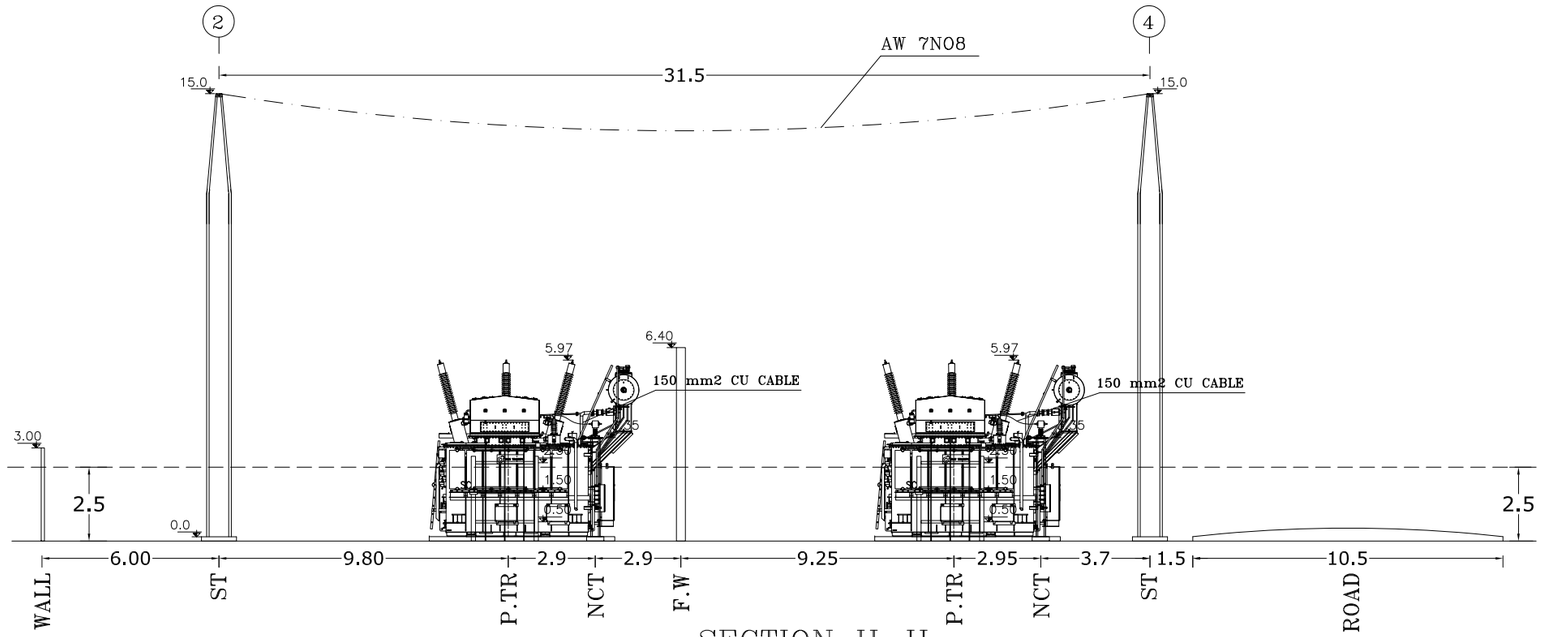

SECTION H–H

REFRENCE DOCUMENT	DOCUMENT NO.	REV.
GENERAL SINGLE LINE DIAGRAM	6154-EL-DIG-0403	

LEGEND :

NOTES :

132KV CABLE: N2XSK2YRY – 1×630/215 mm^2 –76/132(145) kV
Overall diameter: 102.2mm
Minimum Bending Radius=15D: 1.55m

33KV CABLE: XLPE – 1×300/35 mm^2 –18/30 (36) kV
Overall diameter: 58.5mm
Minimum Bending Radius=15D: 0.88m

ELEVATAION :

REV.	DATE	DESCRIPTION	MODIFY	CHECK	APPROVE
04	09/03/2025	ACC TO LET NO.1403/179509/60282	E.BARZEGAR	E.BARZEGAR	M.DANESHPOU
03	02/01/2025	ACC TO LET NO.1403/179509/57039	E.BARZEGAR	E.BARZEGAR	M.DANESHPOU
02	09/09/2024	REVISE.1	E.BARZEGAR	E.BARZEGAR	M.DANESHPOU
01	2024MAY18	ACC TO LET NO.6154-AR-MS-L 1403-22006	E.BARZEGAR	E.BARZEGAR	M.DANESHPOU
00	2024MARCH05	Issued for Approval	E.BARZEGAR	E.BARZEGAR	M.DANESHPOU

CONTRACTOR: MOHAM SHARGH CO.

OWNER: شرکت پالایش نفت آبادان — ABADAN OIL REFINERY COMPANY (AORC)

DWG. NO. : -----

PROJECT:

KOFEISHEH
132/33kv SUBSTATION

TITLE: DOCUMENT TITLE
GENERAL LAYOUT & SECTIONS
(SECTIONS G–G/H–H)

ISSUE CODE: 6154-EL-DWG-0331

PREPARED: E.BARZEGAR	DATE: 09/03/2025	GHODS NIROO ENGINEERING COMPANY (G.N.E.C)
CHECKED: E.BARZEGAR	DATE: 09/03/2025	
APPROVED: M.DANESHPOU	DATE: 09/03/2025	
AUTHORIZED:	DATE:	

CONTRACT NO.: 96-73-6154 | AORC Doc. No.: ----- | SIZE: A3

SCALE: 1/250 | DESIGN STAGE: ----- | REV: 04 | SHEET: 10 of 12

P.O.L.I.R.A.

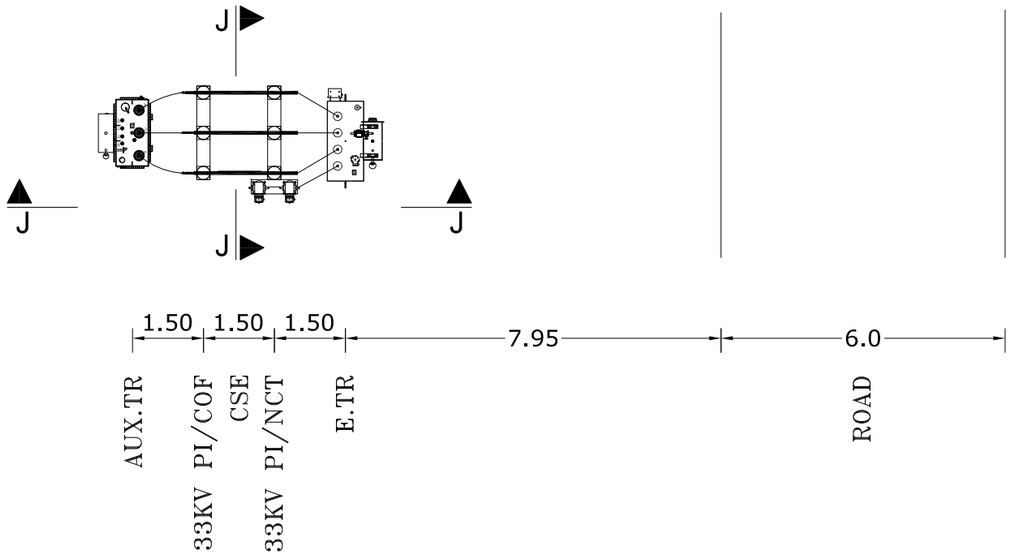

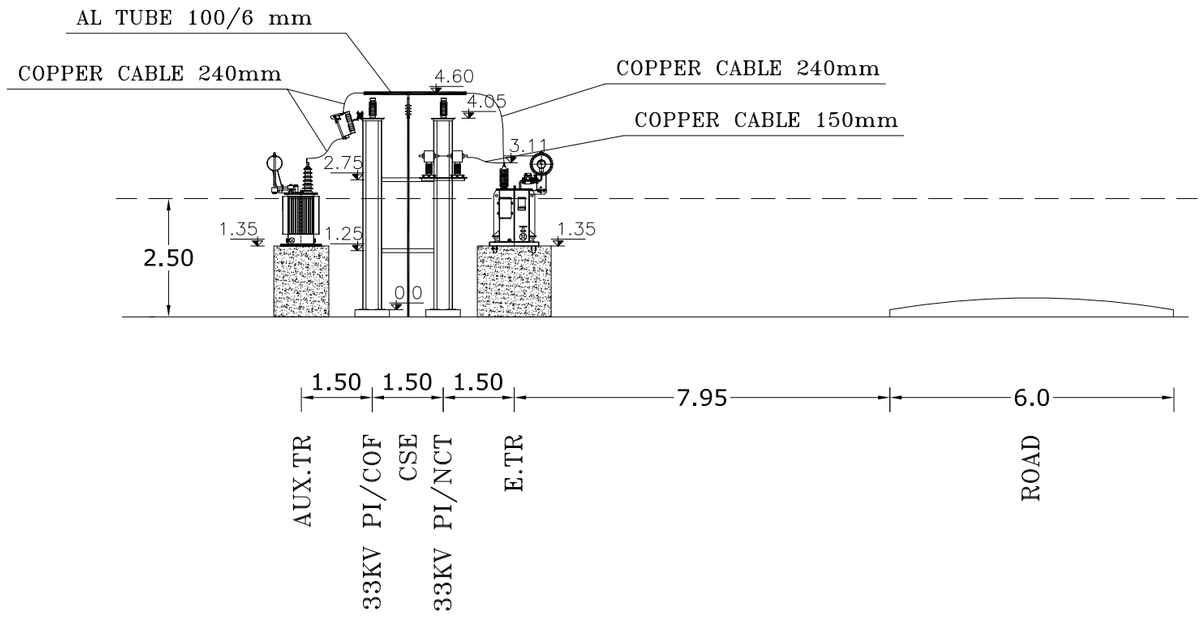

SECTION I–I

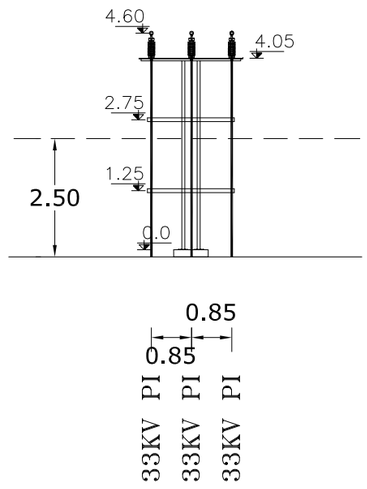

SECTION J–J

REFRENCE DOCUMENT	DOCUMENT NO.	REV.
GENERAL SINGLE LINE DIAGRAM	6154-EL-DIG-0403	

LEGEND :

NOTES :

ELEVATAION :

REV.	DATE	DESCRIPTION	MODIFY	CHECK	APPROVE
04	09/03/2025	ACC TO LET NO.1403/179509/60282	E.BARZEGAR	E.BARZEGAR	M.DANESHPOU
03	02/01/2025	ACC TO LET NO.1403/179509/57039	E.BARZEGAR	E.BARZEGAR	M.DANESHPOU
02	09/09/2024	REVISE.1	E.BARZEGAR	E.BARZEGAR	M.DANESHPOU
01	2024MAY18	ACC TO LET NO.6154-AR-MS-L 1403-22006	E.BARZEGAR	E.BARZEGAR	M.DANESHPOU
00	2024MARCH05	Issued for Approval	E.BARZEGAR	E.BARZEGAR	M.DANESHPOU

CONTRACTOR: MOHAM SHARGH CO.

OWNER: شرکت پالایش نفت آبادان — ABADAN OIL REFINERY COMPANY (AORC)

DWG. NO. : -----

PROJECT: KOFEISHEH 132/33kv SUBSTATION

TITLE: DOCUMENT TITLE — GENERAL LAYOUT & SECTIONS (SECTIONS I–I/J–J)

ISSUE CODE: 6154-EL-DWG-0331

PREPARED: E.BARZEGAR	DATE: 09/03/2025	GHODS NIROO ENGINEERING COMPANY (G.N.E.C)	
CHECKED: E.BARZEGAR	DATE: 09/03/2025		
APPROVED: M.DANESHPOU	DATE: 09/03/2025		
AUTHORIZED:	DATE:		

CONTRACT NO.: 96-73-6154 | AORC Doc. No.: ----- | SIZE: A3

SCALE: 1/100 | DESIGN STAGE: ----- | REV: 04 | SHEET: 11 of 12

P.O.I.: FA

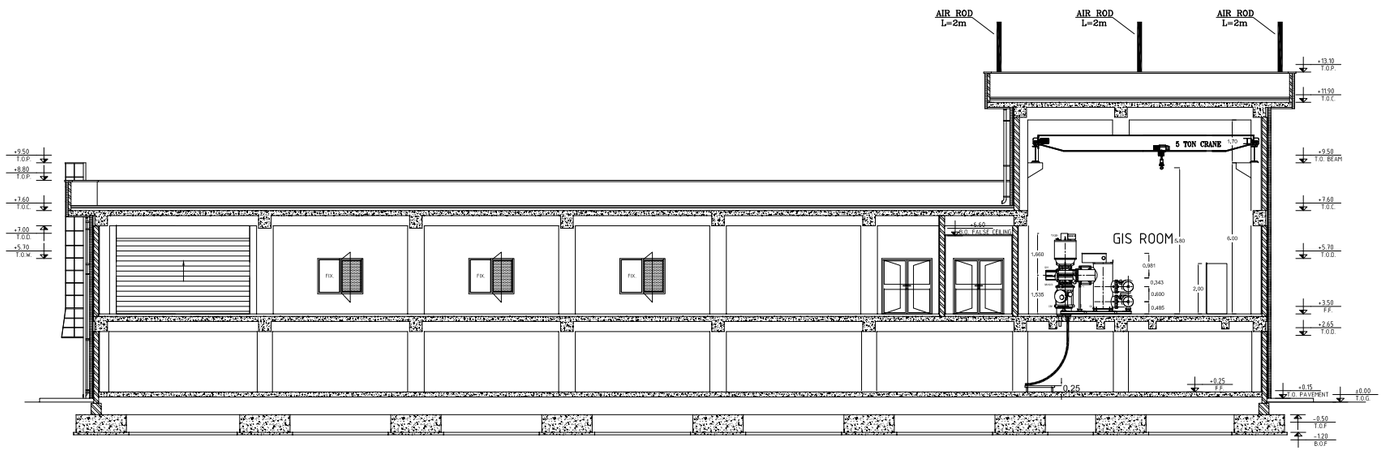

SECTION K-K

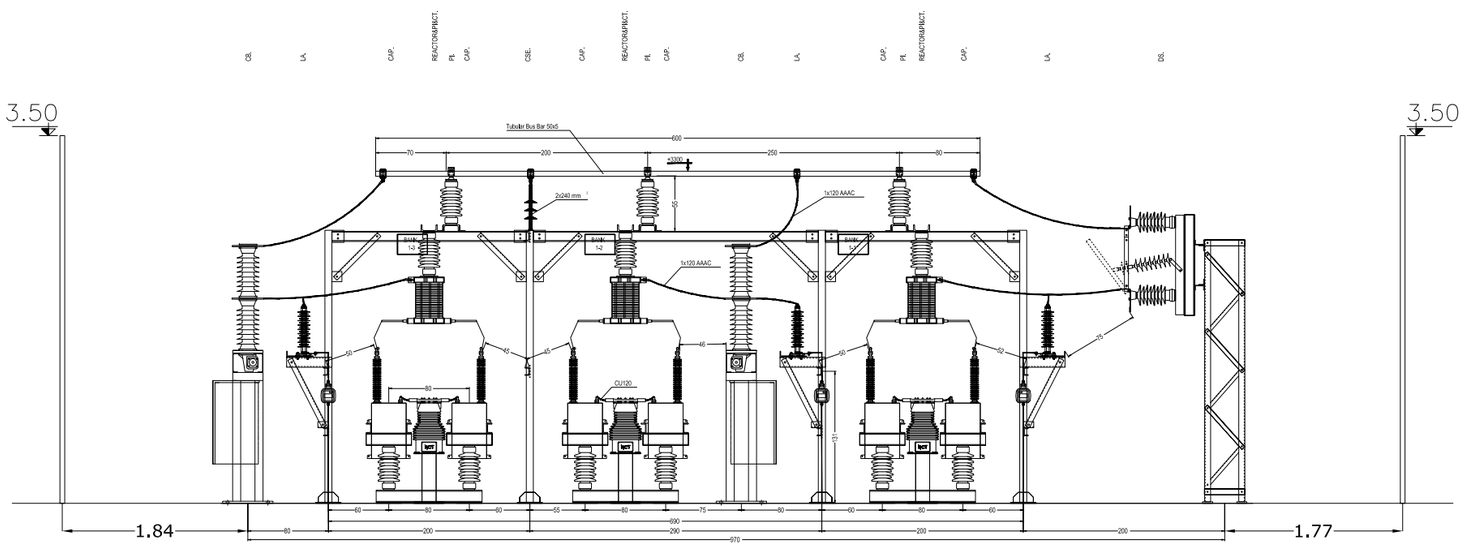

SECTION L-L (scale:1/75)

REFRENCE DOCUMENT	DOCUMENT NO.	REV.
GENERAL SINGLE LINE DIAGRAM	6154-EL-DIG-0403	

LEGEND :

F.F.	Finished Floor
T/B.O.D.	Top/Bottom Of Door
T/B.O.F.	Top/Bottom Of Foundation
T/B.O.G.	Top/Bottom Of Gravel
T/B.O.P.	Top/Bottom Of Parapet
T/B.O.S.	Top/Bottom Of Slab

NOTES :

132KV CABLE: N2XSK2YRY – 1×630/215 mm^2 –76/132(145) kV
Overall diameter: 102.2mm
Minimum Bending Radius=15D: 1.55m

33KV CABLE: XLPE – 1×300/35 mm^2 –18/30 (36) kV
Overall diameter: 58.5mm
Minimum Bending Radius=15D: 0.88m

ELEVATAION :

REV.	DATE	DESCRIPTION	MODIFY	CHECK	APPROVE
04	09/03/2025	ACC TO LET NO.1403/179509/60282	E.BARZEGAR	E.BARZEGAR	M.DANESHPOU
03	02/01/2025	ACC TO LET NO.1403/179509/57039	E.BARZEGAR	E.BARZEGAR	M.DANESHPOU
02	09/09/2024	REVISE.1	E.BARZEGAR	E.BARZEGAR	M.DANESHPOU
01	2024MAY18	ACC TO LET NO.6154-AR-MS-L 1403-22006	E.BARZEGAR	E.BARZEGAR	M.DANESHPOU
00	2024MARCH05	Issued for Approval	E.BARZEGAR	E.BARZEGAR	M.DANESHPOU

CONTRACTOR: MOHAM SHARGH CO.

OWNER: شرکت پالایش نفت آبادان — ABADAN OIL REFINERY COMPANY (AORC)

DWG. NO. : -----

PROJECT:

KOFEISHEH
132/33kv SUBSTATION

TITLE: **DOCUMENT TITLE**
GENERAL LAYOUT & SECTIONS
(SECTIONS G-G/H-H/I-I)

ISSUE CODE: 6154-EL-DWG-0331

PREPARED: E.BARZEGAR	DATE: 09/03/2025	GHODS NIROO ENGINEERING COMPANY (G.N.E.C)	
CHECKED: E.BARZEGAR	DATE: 09/03/2025		
APPROVED: M.DANESHPOU	DATE: 09/03/2025		
AUTHORIZED:	DATE:		

CONTRACT NO.: 96-73-6154		AORC Doc. No.: -----	SIZE: A3
SCALE: 1/300	DESIGN STAGE: -----	REV: 04	SHEET: 12 of 12

P.O.I.: FA